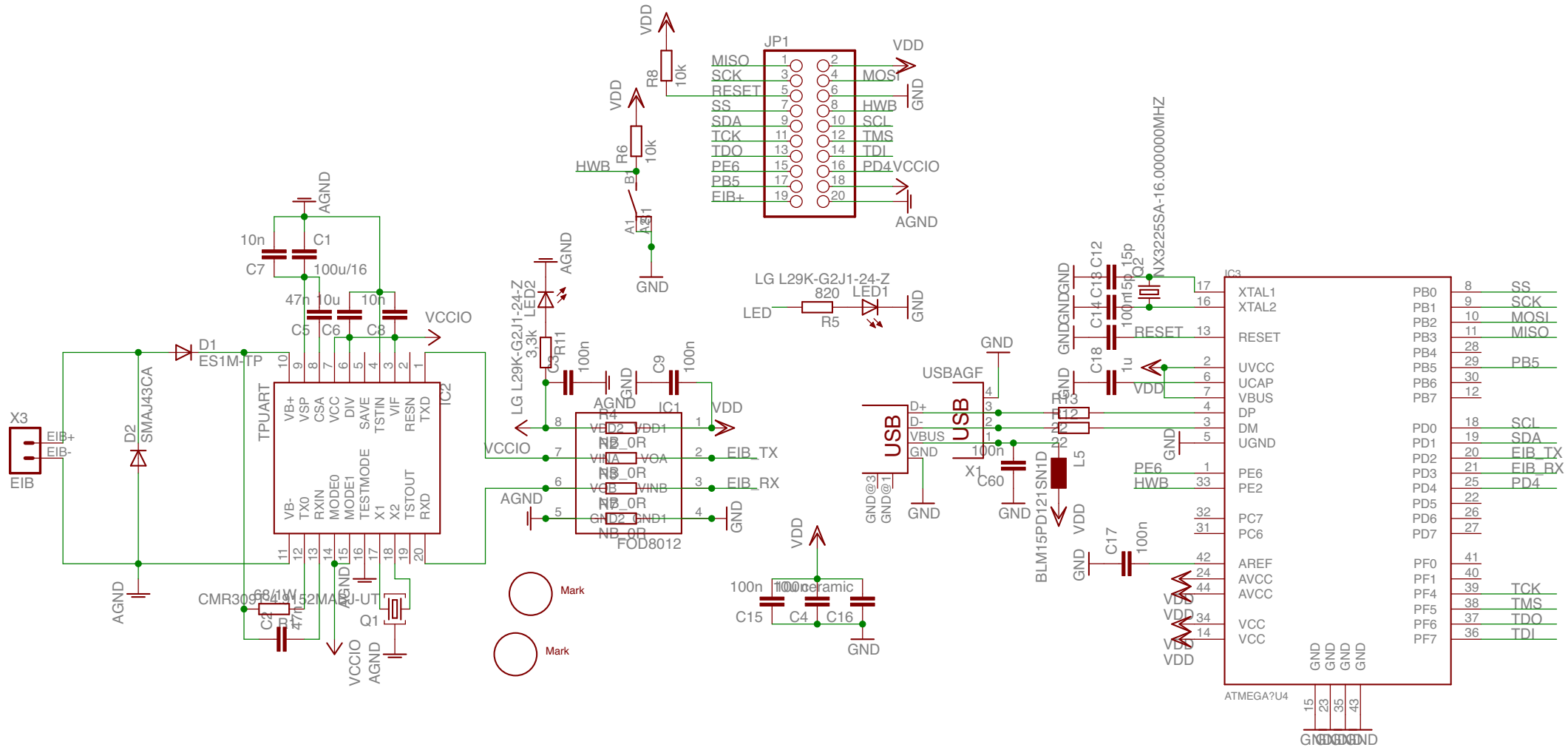

28.05.11 01:43 f=1.06 /Users/tostmann/Desktop/Projects/TUL/TUL11.sch (Sheet: 1/1)