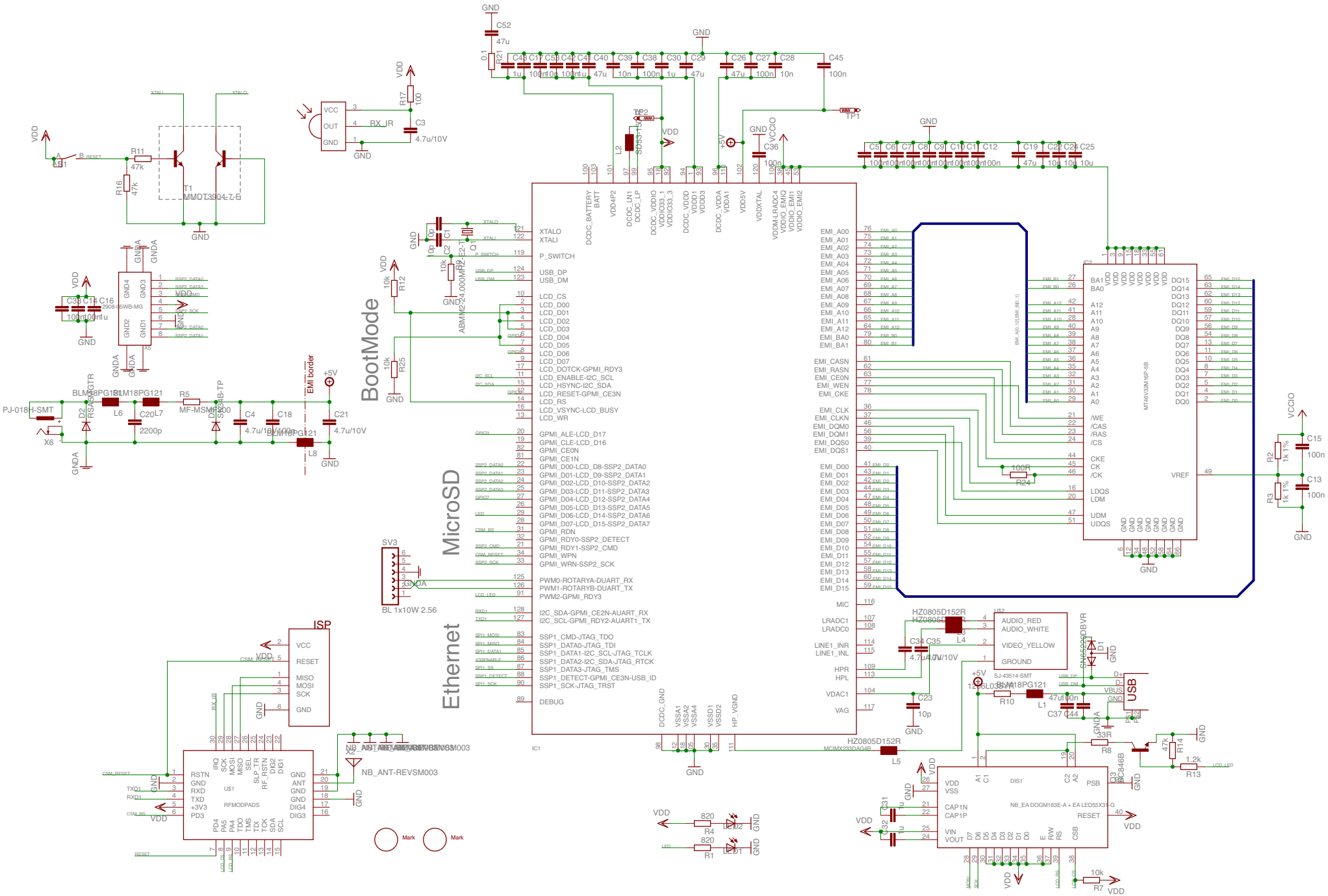

28.04.11 15:14 f=0.65 /Users/tostmann/Desktop/Projects/TuxRadio/tuxradio12b.sch (Sheet: 1/1)