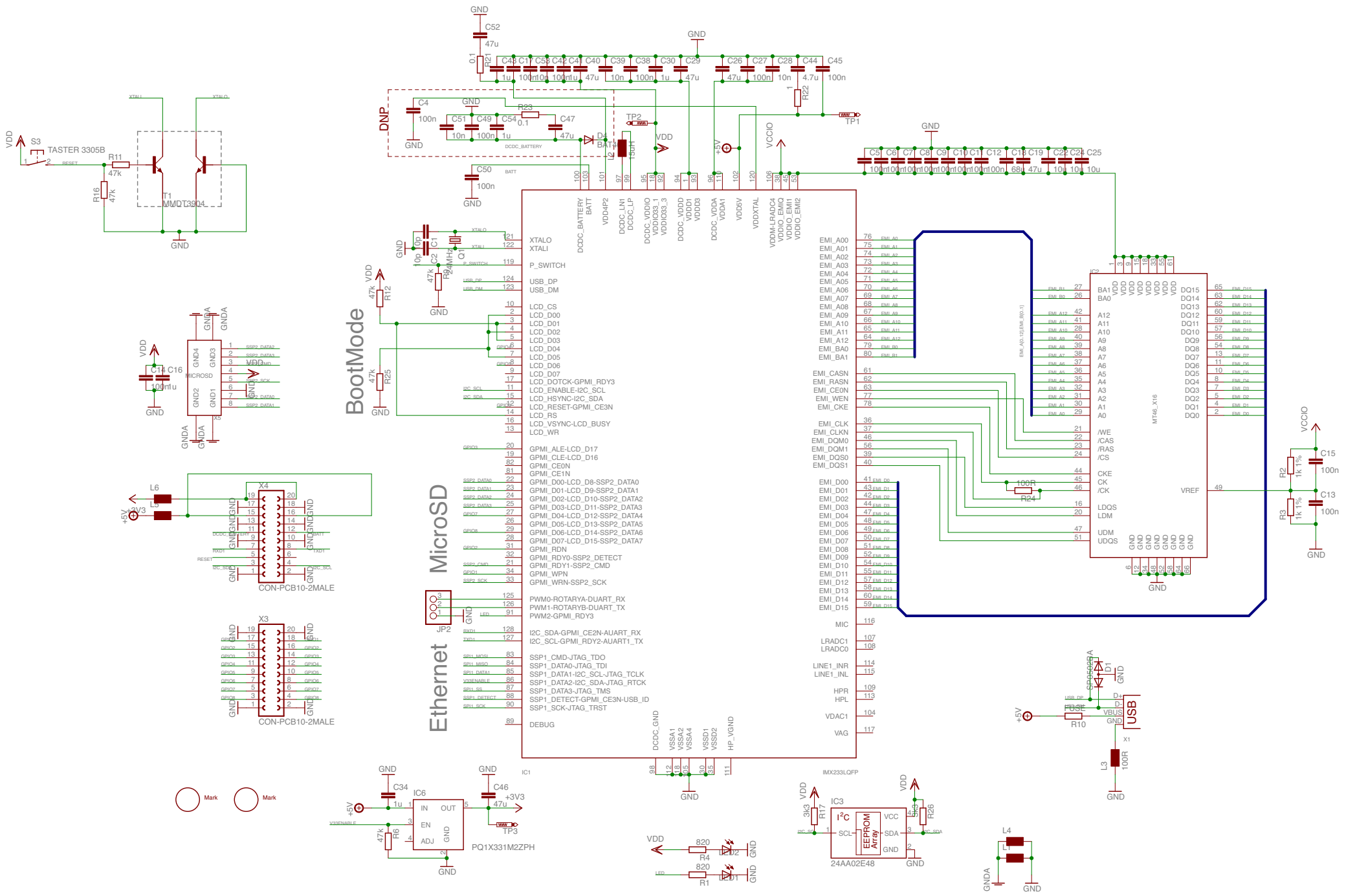

25.08.10 13:35 f=0.67 /Users/tostmann/Desktop/Boards/tuxrail14.sch (Sheet: 1/2)

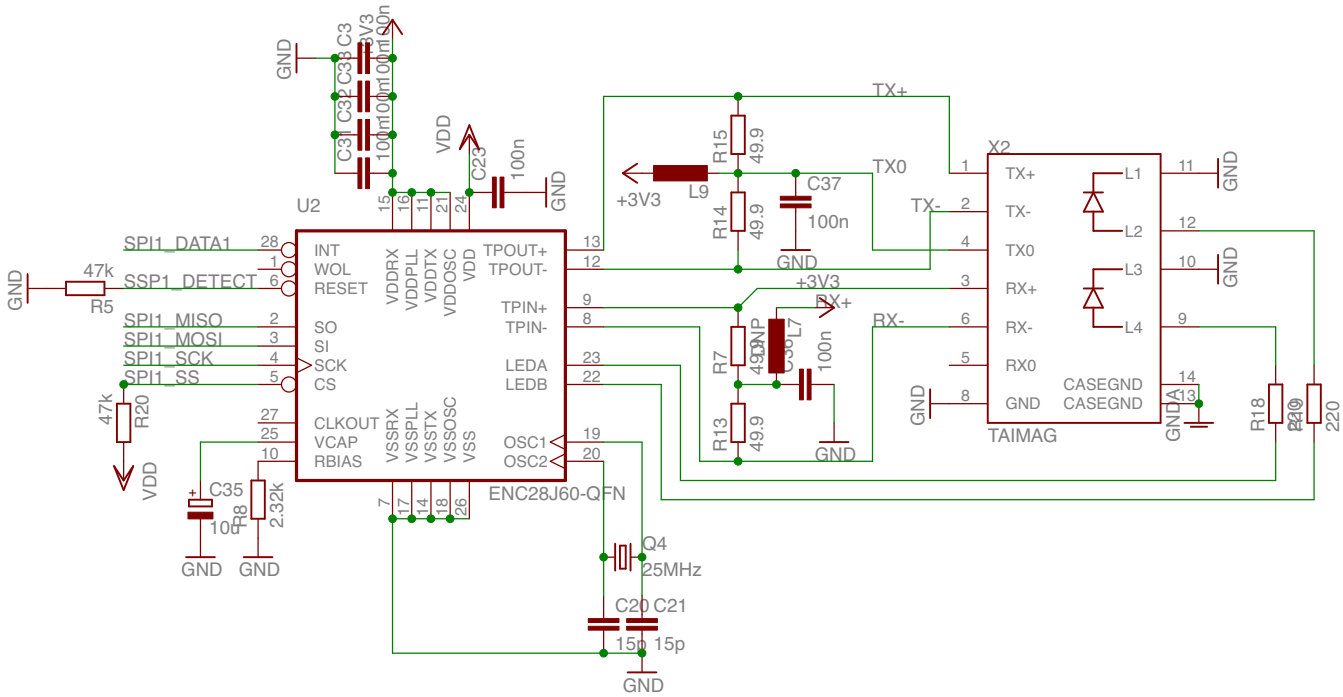

25.08.10 13:35 /Users/tostmann/Desktop/Boards/tuxrail14.sch (Sheet: 2/2)