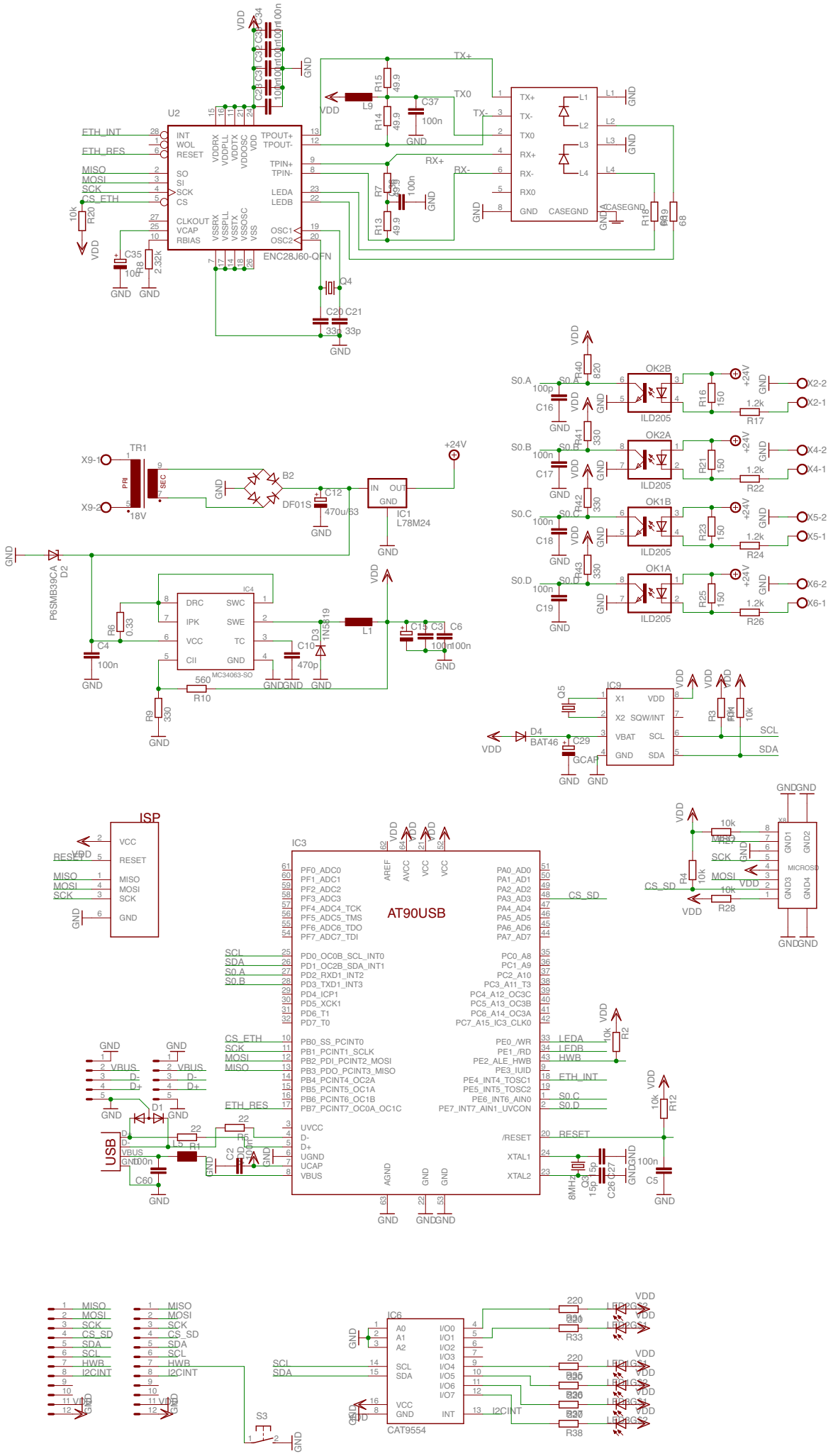

17.09.09 00:48 f=0.70 /Users/tostmann/Desktop/Boards/4S0ETH.sch (Sheet: 1/1)