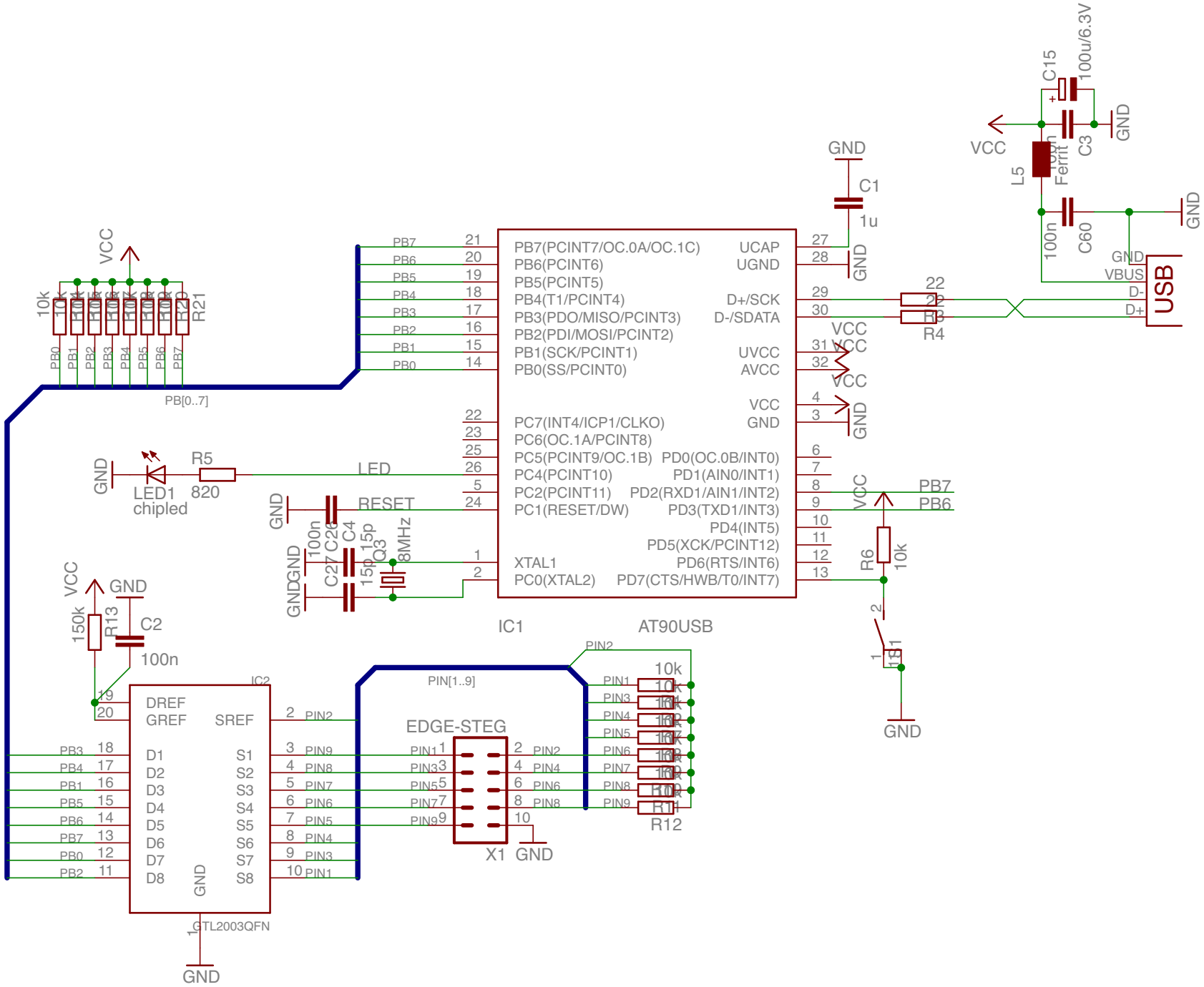

28.06.09 18:07 f=1.28 /Users/tostmann/Desktop/Boards/ISP.sch (Sheet: 1/1)