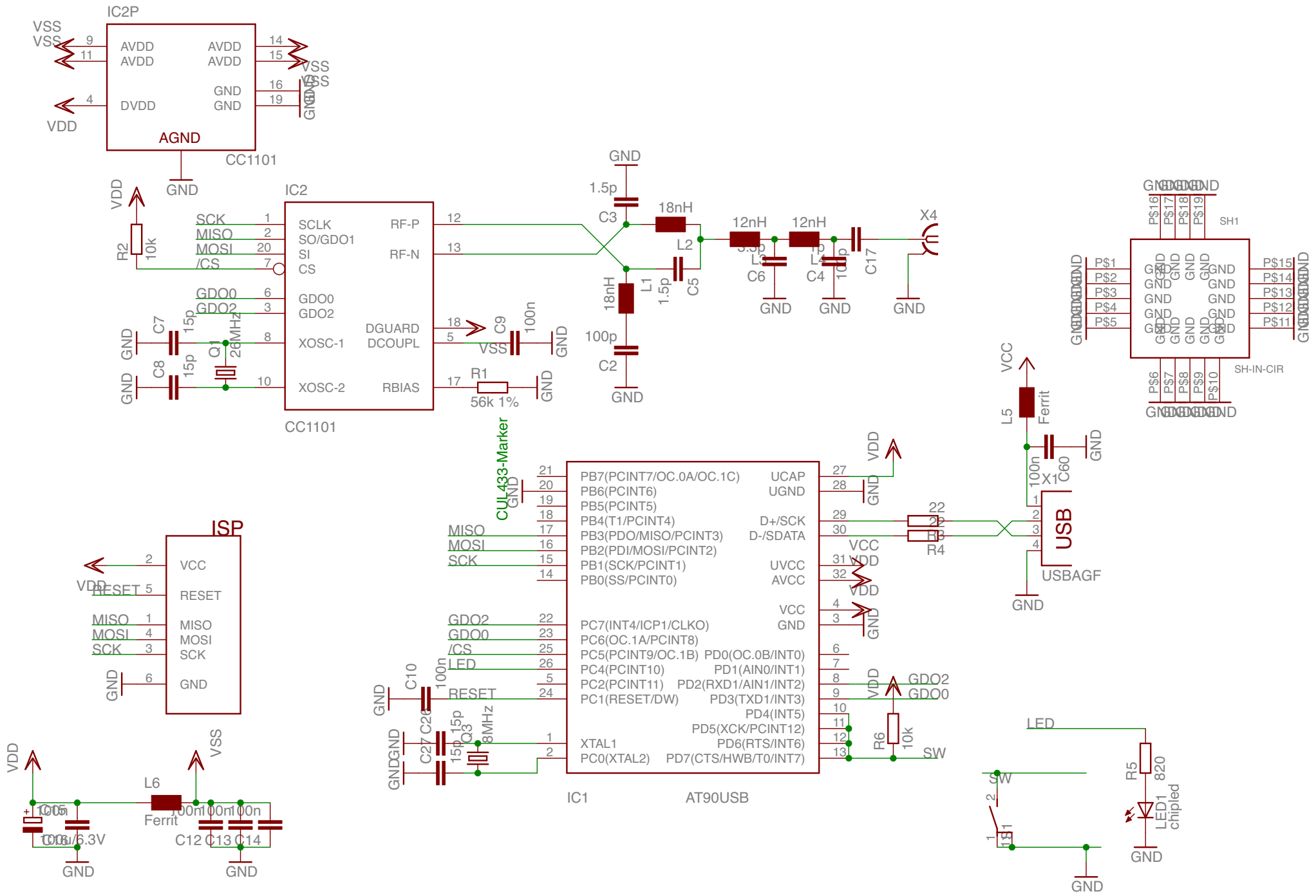
IC2P
AVDD
DVDD
GND
AGND
CC1101
IC2
SCLK
SO/GDO1
SI
CS
GDO0
GDO2
XOSC-1
XOSC-2
RF-P
RF-N
DGUARD
DCOUPL
RBIAS
SCK
MISO
MOSI
/CS
R2
10k
C7
15p
C8
15p
Q1
26MHz
C9
100n
R1
56k 1%
1.5p
C3
18nH
L2
L1
C5
100p
C2
12nH
C6
C4
C17
X4
SH1
SH-IN-CIR
P$1
P$2
P$3
P$4
P$5
P$6
P$7
P$8
P$9
P$10
P$11
P$12
P$13
P$14
P$15
P$16
P$17
P$18
P$19
VCC
L5
Ferrit
C60
X1
USB
USBAGF
CUL433-Marker
PB7(PCINT7/OC.0A/OC.1C)
PB6(PCINT6)
PB5(PCINT5)
PB4(T1/PCINT4)
PB3(PDO/MISO/PCINT3)
PB2(PDI/MOSI/PCINT2)
PB1(SCK/PCINT1)
PB0(SS/PCINT0)
PC7(INT4/ICP1/CLKO)
PC6(OC.1A/PCINT8)
PC5(PCINT9/OC.1B)
PC4(PCINT10)
PC2(PCINT11)
PC1(RESET/DW)
XTAL1
PC0(XTAL2)
UCAP
UGND
D+/SCK
D-/SDATA
UVCC
AVCC
PD0(OC.0B/INT0)
PD1(AIN0/INT1)
PD2(RXD1/AIN1/INT2)
PD3(TXD1/INT3)
PD4(INT5)
PD5(XCK/PCINT12)
PD6(RTS/INT6)
PD7(CTS/HWB/T0/INT7)
R4
R6
10k
SW
C10
100n
C27
C26
Q3
8MHz
IC1
AT90USB
ISP
VCC
RESET
MISO
MOSI
SCK
GND
L6
Ferrit
C12
C13
C14
LED
R5
820
LED1
chipled