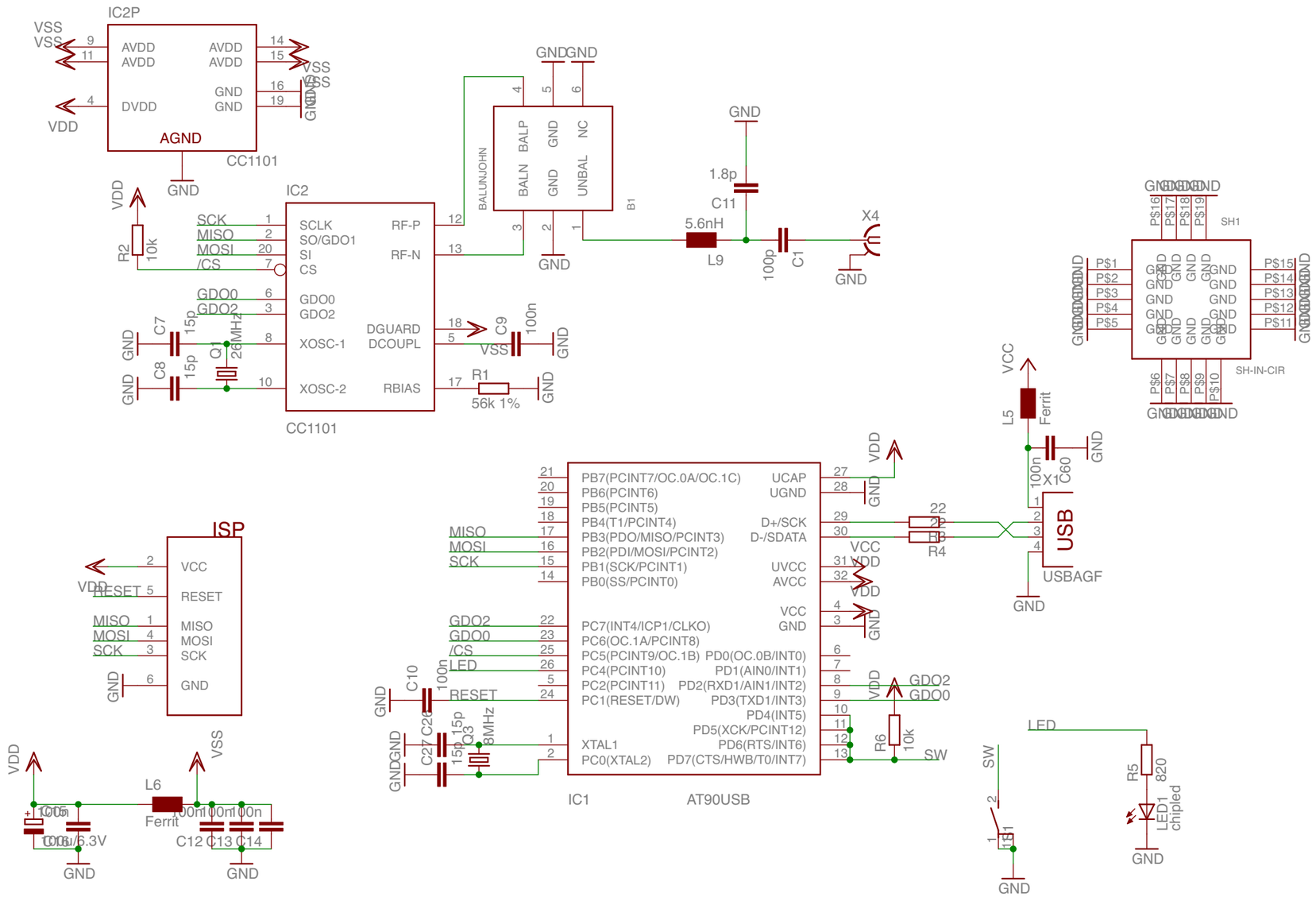

20.05.09 01:24 f=1.20 /Users/tostmann/Desktop/Boards/CUL2X.sch (Sheet: 1/1)